LOCKS & ARCHITECTURAL FITTINGS AND SYSTEMS

Product Detailer

Essential Mortise Handles

Introducing | Essential Mortise Handle series

- The Essential Mortise Handle series, which redefines door hardware by merging elegance and functionality.
- This collection comes in two unique Designs that add a stylish touch to any exterior or interior door and are expertly manufactured.
- These handles comes in three exquisite finishes, Satin steel, Antique Brass, Matte black (Powder coated).
- Designed by our best-in-class industrial designers considering current and future trends in market
- The target customers are builders, architects, end customers etc.
- Popular mortise locks are the fastest growing and maximum volume segments in locks.
- Lock body and Cylinders are available in complementing finishes
- 1 Year Warranty is a symbol of company's confidence on its product which is a selling point for the customer.

LOCKS & ARCHITECTURAL FITTINGS AND SYSTEMS

Essential Mortise Handle

EM 01

EM 02

Satin Steel

LOCKS & ARCHITECTURAL FITTINGS AND SYSTEMS

Essential Mortise Handle

EM 01

EM 02

Antique Brass

LOCKS & ARCHITECTURAL FITTINGS AND SYSTEMS

Essential Mortise Handle

EM 01

EM 02

Matte Black

LOCKS & ARCHITECTURAL FITTINGS AND SYSTEMS

Essential Mortise Handle

EM 01

EM 02

Positioning:

- The Essential Mortise Handle elevates your door's visual appeal & usefulness by fusing classic style with long lasting performance.
- A perfect blend of timeless design and durable functionality.

Applications:

- Doors in homes, offices, conference rooms, hotels and other commercial spaces:
- Suitable for door thickness .

Operation:

- Lock Body when fitted with Handle set & Euro profile Pin Cylinder:
- Turning the handle retracts the Latch bolt
- One turn of the key from outside or inside throws the Dead bolt out by 10 mm. A further one turn throws the bolt by another 10 mm. (Use knob from inside for 1CK)
- Two reverse turns of the key retracts the Dead bolt, and a further half turn will retract the Latch bolt

Testing Parameters

Test	Parameter	Application
Solvent resistance double rubs (Acetone rub test)	150+	For finish
Pencil hardness	4 H +	For finish
Cross Hatch test	No peel off from 1mm Sq.	For Powder Coated finish
Corrosion resistance (Salt spray test)	96 Hrs +	For finish
Handle life cycle test	50000+	Durability
Cylinder life cycle test	50000+	Durability
Lock life cycle test	50000+	Durability

Packaging Content

Model	Contents
All Models	1 Unit Set Comprising Of: 2 Unit Handles, 1 Unit Mortise Lock, 1 Unit Pin Cylinder, 3 Unit Keys, 1 Unit Cylinder Screw, 1 Unit Striker Plate, 1 Unit Square Shank, 1 Unit Screw Packet

:

Technical Specifications

Component	Material
Technology	Pin Cylinder
Lock Body	CRCA Steel
Cover Plate	MS
Handle	Aluminum
Latch Bolt	Mazak
Dead Bolt	Mazak
Forend Plate & Striker Plate	CRCA Steel
Keys	Brass
Cylinder	Mazak

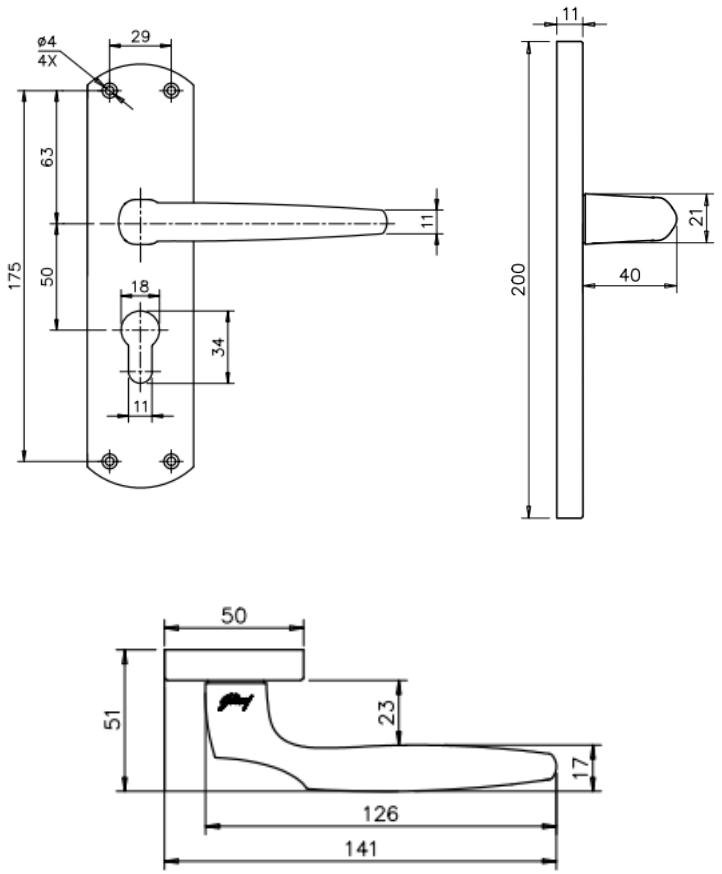

EM 01

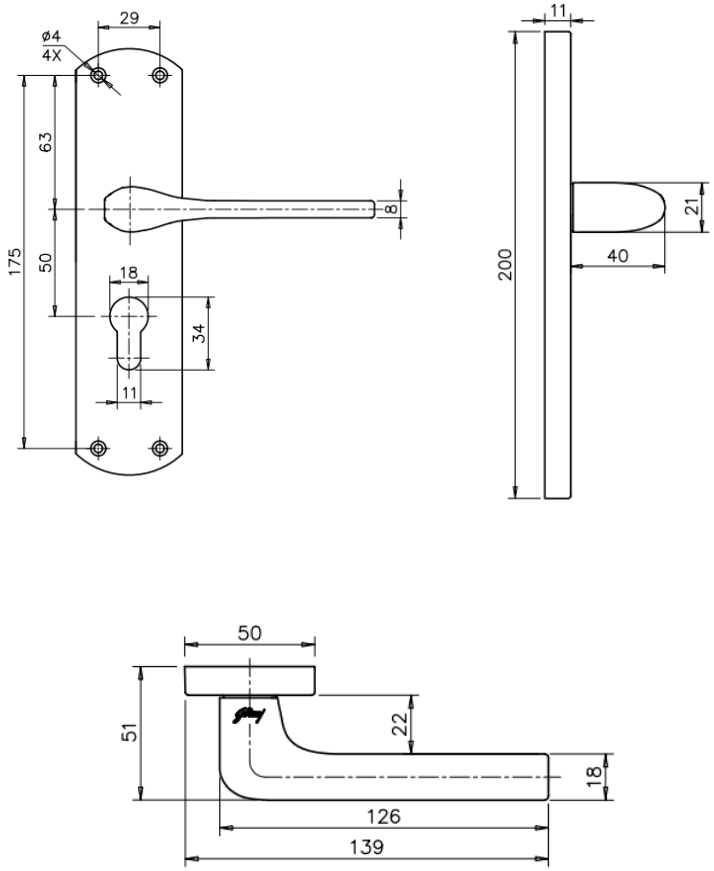

EM 02

SKU List: EM 01

Product Description	Product Code	UNSPSC code	MRP	Standard Packaging
EM 01 Mortise Handle Set 1CK SS	7750	46171598SD02275	1800	4
EM 01 Mortise Handle Set 2C SS	7751	46171598SD02276	1760	4
EM 01 Mortise Handle Set 1CK AB	7752	46171598SD02277	1860	4
EM 01 Mortise Handle Set 2C AB	7753	46171598SD02278	1820	4
EM 01 Mortise Handle Set 1CK MB	7754	46171598SD02279	1920	4
EM 01 Mortise Handle Set 2C MB	7755	46171598SD02280	1880	4

SKU List: EM 02

Product Description	Product Code	UNSPSC code	MRP	Standard Packaging
EM 02 Mortise Handle Set 1CK SS	7694	46171598SD02281	1800	4
EM 02 Mortise Handle Set 2C SS	7695	46171598SD02282	1760	4
EM 02 Mortise Handle Set 1CK AB	7696	46171598SD02283	1860	4
EM 02 Mortise Handle Set 2C AB	7697	46171598SD02284	1820	4
EM 02 Mortise Handle Set 1CK MB	7698	46171598SD02285	1920	4
EM 02 Mortise Handle Set 2C MB	7699	46171598SD02286	1880	4

Discount Structure:

Retailer - 40% on MRP Distributor - 45.68% on MRP Direct Dealer - 44% on MRP

LOCKS & ARCHITECTURAL FITTINGS AND SYSTEMS

Essential Mortise Handle

Thank You!